H.V. Series Toggle Clamps
Straight Base

Model No	HV-BII-500-BS
Weight	2.220 Kgs
Handle Opening (± 3°)	120°
Clamp Bar Opening (± 3°)	180°
Holding Capacity	11.80 kN
Material	Steel
Finish	Black ED* Coating
Arm Type	Solid Arm
Base Type	Straight Base

Clamp is supplied in separate parts

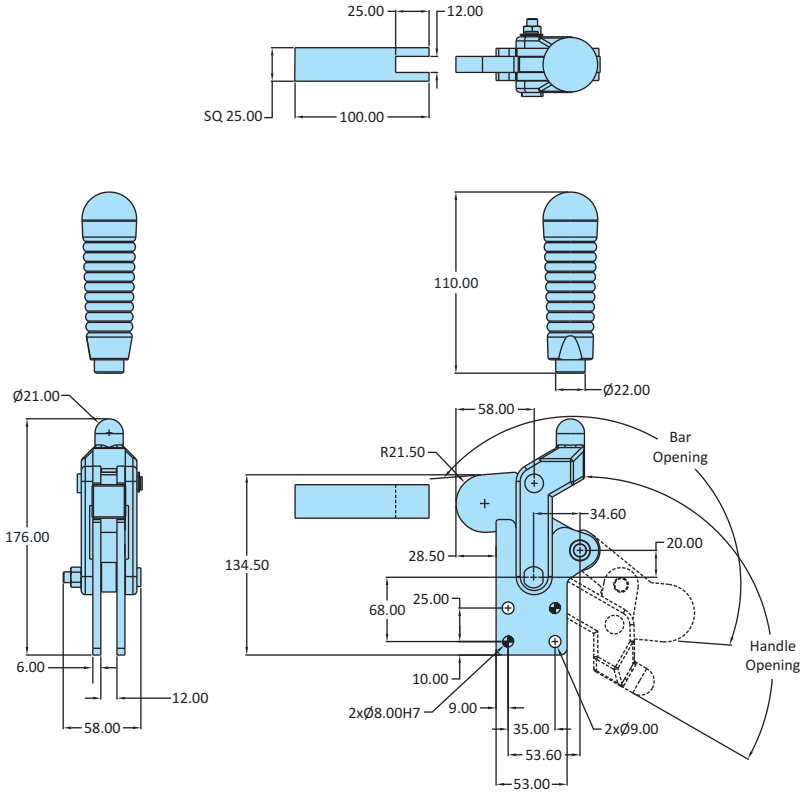

H.V. Series Toggle Clamps
Straight Base

Model No	HV-BII-1000-BS
Weight	3.530 Kgs
Handle Opening (± 3°)	120°
Clamp Bar Opening (± 3°)	180°
Holding Capacity	24.50 kN
Material	Steel
Finish	Black ED* Coating
Arm Type	Solid Arm
Base Type	Straight Base
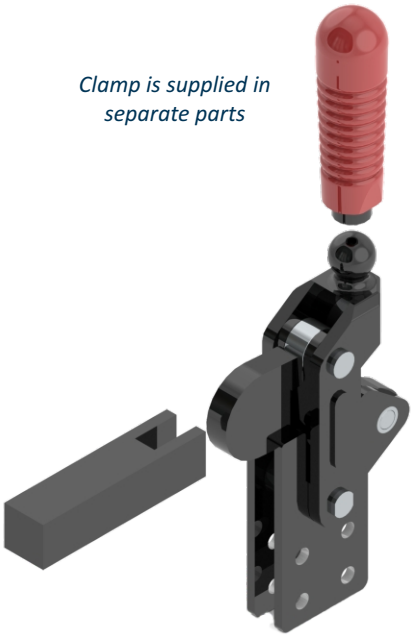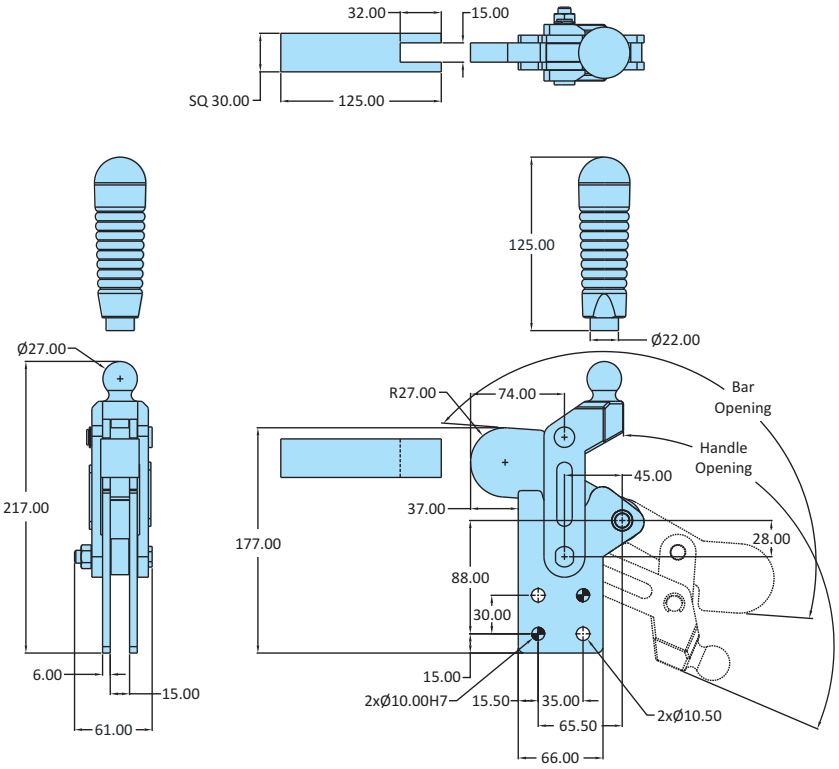
Clamp is supplied in separate parts