Hold Down Action Clamps

Model No.	AOT-3586-UB
Weight	1.200 Kgs
Clamp Bar Opening (± 3°)	95°
Holding Capacity	X1 - 2.00 kN
	X2 - 1.00 kN
Cylinder Type	ISO Series Double Acting Magnetic Cylinder
Cylinder Bore	25 mm
Cylinder Stroke	50 mm
Arm Type	Adjustable Arm
Supplied with Spindle	RT-865-2N2W

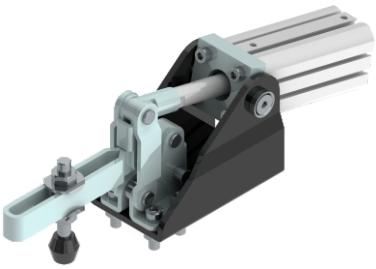

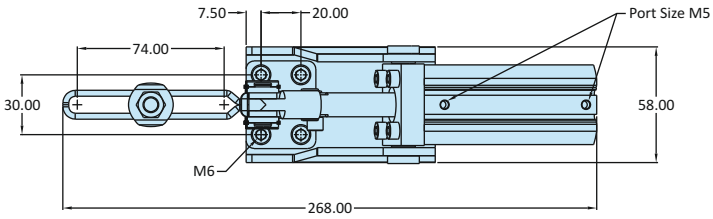

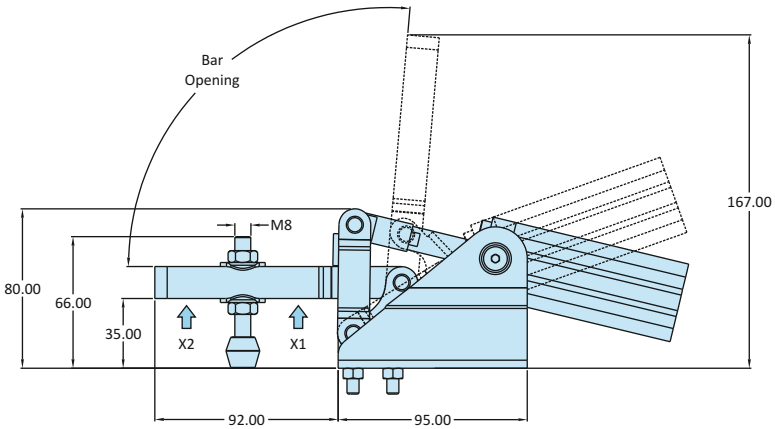

Hold Down Action Clamps
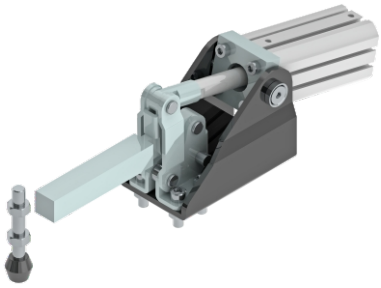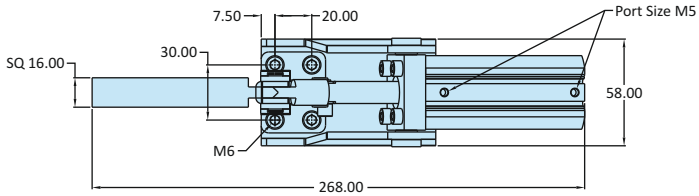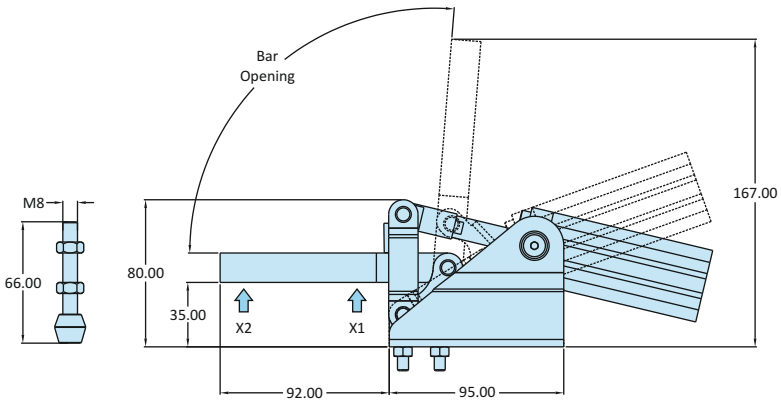
Model No.	AOT-3586-SB
Weight	1.200 Kgs
Clamp Bar Opening (± 3°)	95°
Holding Capacity	X1 - 2.00 kN
	X2 - 1.00 kN
Cylinder Type	ISO Series Double Acting Magnetic Cylinder
Cylinder Bore	25 mm
Cylinder Stroke	50 mm
Arm Type	Solid Arm
Supplied with Spindle	RT-865-2N